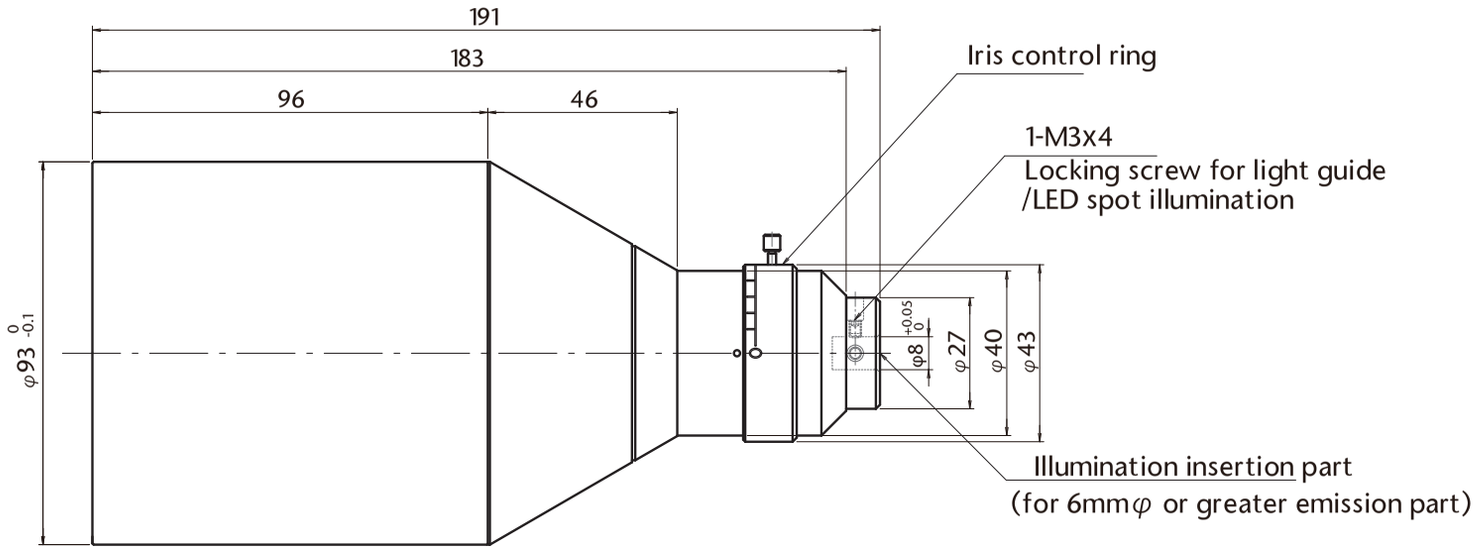

Model Name: MTI-78

SCHOTT MORITEX Corporation